Client _____ Quantity _____

Project _____ Position _____

Function oven

Model: BERU443SP **Cod:** NP01041022009

Technical data

Number of pans:	4
Pans size (mm):	433x333
Tray centre distance (mm):	70
Number of fans:	2
Fan speed:	1
Dimensions (mm):	557 x 640 x 563
Net weight (kg):	37
Volume (m3):	0,200
Chamber size (mm):	452 x 371 x 326
Electric power (kW):	3,5
Voltage (V):	220-240
Power supply (A):	16
Phases:	1N
Cable section (mmq):	3G1,5
Frequency (Hz):	50-60
Cold water connection:	3/4"
Cold water pressure (bar):	Max. 5 bar
Drain size (mm):	30
Packing dimensions (mm):	590 x 680 x 788
Chamber size (mm):	452 x 371 x 326
Gross weight (kg):	40
Gross volume (m3):	0,320

Features

Oven type:	Convection
Control:	Programmable
Grill:	Available
Steam:	Direct
Steam management:	Pressure
Temperature range:	50°C - 300°C
Door:	Drop down
Cooking chamber bottom:	AISI 430 mirror finish
Range timer:	1' - 120'
Flue:	Always open

In order to constantly offer the best possible products we reserve the right to make changes on technical specifications without incurring any obligation for equipment previosly or subsequently sold.

Programmable electric convection ovens with humidifier and grill. Capacity 4 trays 433x333. Cooking chamber with rounded corners, welded without visible welding. Adjustable height of the feet. Removable grid shelves with distance between trays of 70 mm. Door with wide glass surface equipped with air channel for the external glass ventilation, which further limits the temperature on the external surface. Door handle in plastic material, highly resistant to shocks and temperatures. Silicone gasket inserted in the front of the chamber, with maximum seal capacity, avoiding temperature drops. Heating through high efficiency coated heating elements. Timer from 1' to 120' (plus infinite position). Manual button humidifier. Temperature control in the cooking chamber from 50 °C to 300 °C. 2 fans. Wide air flow channels of the chamber that allows a perfect cooking uniformity, both in conditions of scarce and full load. Folding opening of the internal glass. Control panel of all the functional parts placed on the bottom side of the oven. Safety thermostat in the cooking chamber to avoid dangerous high temperatures. Water inlet for the humidifier control. Internal lighting positioned on the left side of the cooking chamber. Automatic programmable steam injection. Electric power 3,5 kW - 220-240V/1N+G 50/60 Hz.

Technical draw

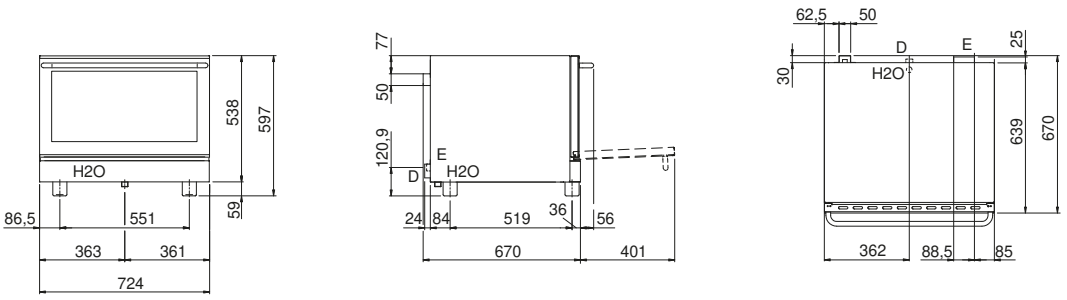

E: Electric connection

D: Drain for water

H2O : Water inlet 3/4"

In order to constantly offer the best possible products we reserve the right to make changes on technical specifications without incurring any obligation for equipment previosly or subsequently sold.