Client _____ Quantity _____

Project _____ Position _____

Pratika oven

Model: FDG051TV **Cod:** NP01052033005

Technical data

Number of pans:	5
Pans size (mm):	EN 600x400 - GN 1/1
Tray centre distance (mm):	74
Number of fans:	1
Fan speed:	2
Dimensions (mm):	905 x 845 x 750
Net weight (kg):	105
Volume (m3):	0,575
Chamber size (mm):	645 x 449 x 420
Electric power (kW):	0,4
Voltage (V):	220-240
Power supply (A):	2
Phases:	1N
Cable section (mmq):	3G1,5
Frequency (Hz):	50
Gas power (kW):	9,5
Total gas power (Kcal/h):	8169
Gas connection:	1/2"
Cold water connection:	3/4"
Cold water pressure (bar):	Max. 5 bar
Softened water inlet:	3/4"
Drain size (mm):	40
Packing dimensions (mm):	955 x 900 x 921
Chamber size (mm):	645 x 449 x 420
Gross weight (kg):	120
Gross volume (m3):	0,800

Features

Oven type:	Combi
Control:	Touch screen
Touch screen:	5"
Cooling:	Rapid chamber cooling function
Probe:	Standard - one single point core probe
Washing:	Standard - Open Circuit
Detergent:	Liquid
Steam:	Direct
Steam management:	Automatic
Temperature range:	30°C - 280°C
Door:	Hinged door
Fan:	Made of AISI 304 stainless steel – autoreverse
Flue:	Automatic
Recipes:	Standard

In order to constantly offer the best possible products we reserve the right to make changes on technical specifications without incurring any obligation for equipment previosly or subsequently sold.

Gas multifunction oven with capacitive touch screen. Capacity 5 trays GN 1/1 or pastry 600x400.Three cooking modes: convection, steam and mixed. Equipped with recipe book and possibility to store personalized recipes in automatic sequence (up to 16 cycles). Cooking chamber with rounded corners in order to guarantee an easy cleaning. Internal pair of grid support, removable and replaceable, having gap between grids of 74 mm. Door with wide glass surface. Air channel for the external glass ventilation which limits the temperature on the external surface. 1 autoreverse fan with two-speed-fan regulation. Gasket inserted in the front of the chamber, with maximum seal capacity. Electronic air-valve opening. Indirect heating by flame tubes and atmospheric burners. Removable liquid/condensate collecting basin placed under the chamber. Temperature control in the cooking chamber from 50° to 280°C. Single point core probe, grid 600x400 and automatic washing system included. Total gas power: 9,5 kW - Electric power 0,4 kW - 220-240V 50 Hz

Technical draw

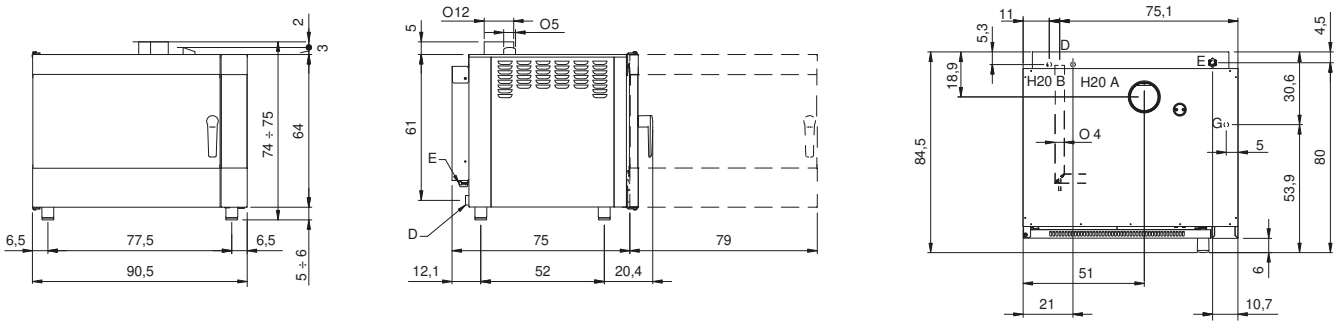

G:	Gas connection	**E:**	Electric connection	**D:**	Drain for water
H2OA:	Water inlet	**H2OB :**	Softened water inlet		

In order to constantly offer the best possible products we reserve the right to make changes on technical specifications without incurring any obligation for equipment previosly or subsequently sold.