Client		Quantity	
Project		Position	

Pratika Kompact oven

Model: FDEK101P **Cod:** NP01103021001

Technical data

Number of pans:	10
Pans size (mm):	GN 1/1
Tray centre distance (mm):	60
Number of fans:	2
Fan speed:	2
Dimensions (mm):	517 x 890 x 1010
Net weight (kg):	96
Volume (m3):	0,4647
Chamber size (mm):	380 x 549 x 620
Electric power (kW):	15,7
Voltage (V):	380-415
Power supply (A):	27
Phases:	3N
Cable section (mmq):	5G4
Frequency (Hz):	50-60
Cold water connection:	3/4"
Cold water pressure (bar):	Max. 5 bar
Softened water inlet:	3/4"
Drain size (mm):	40
Packing dimensions (mm):	560 x 970 x 1180
Chamber size (mm):	380 x 549 x 620
Gross weight (kg):	104
Gross volume (m3):	0,6409

Features

Oven type:	Combi
Control:	Programmable
Functions:	Convection cooking, steam, mixed cooking, multilevel, phases cooking, core probe and Delta T cooking
Steam:	Direct
Steam management:	Time management
Temperature range:	30°C - 280°C
Door:	Hinged door
Fan:	Made of AISI 304 stainless steel – autoreverse
Range timer:	1'-240'
Flue:	Automatic
Recipes:	Standard

In order to constantly offer the best possible products we reserve the right to make changes on technical specifications without incurring any obligation for equipment previosly or subsequently sold.

Programmable digital electric combi steamer. Door with left handle. Capacity 10 trays GN 1/1 version compact. Cooking chamber with rounded corners, welded without visible welding to allow a perfect cleaning. Adjustable height of the feet. Removable Gastronorm grid shelves GN1/1 made in steel wire, with distance between trays of 30-60 mm. Door with air channel for the external glass ventilation, which further limits the temperature on the external surface. Door handle in plastic material, highly resistant to shocks and temperatures. Silicone gasket inserted in the front of the chamber, with maximum seal capacity, avoiding temperature drops. Gutter for the collection of liquid, connected to the drain. Heating through high efficiency coated heating elements. Timer from 1' to 120' (plus infinite position). Power-adjusting control humidifier. Temperature control in the cooking chamber from 50 °C to 280 °C. N°2 double speed auto-reverse fans. Programmable air-valve opening. Wide air flow channels of the chamber that allows a perfect cooking uniformity, both in conditions of scarce and full load. Folding opening of the internal glass. Digital control panel placed above the oven. Up to 99 programs can be saved, with the possibility of sequencing up to 3 cooking phases for each cycle. Possibility of cooking in convection/mixed mode or Steam. Possibility of cooking by setting the time or using a core probe and Delta T. (optional probe). Possibility of using automatic washing cycles (optional). Safety thermostat in the cooking chamber to avoid dangerous high temperatures beyond 350°C. Water inlet for the humidifier control. Internal lighting positioned on the left side of the cooking chamber. Electric power 15,6 kW - 380-415V 50/60 Hz.

Technical draw

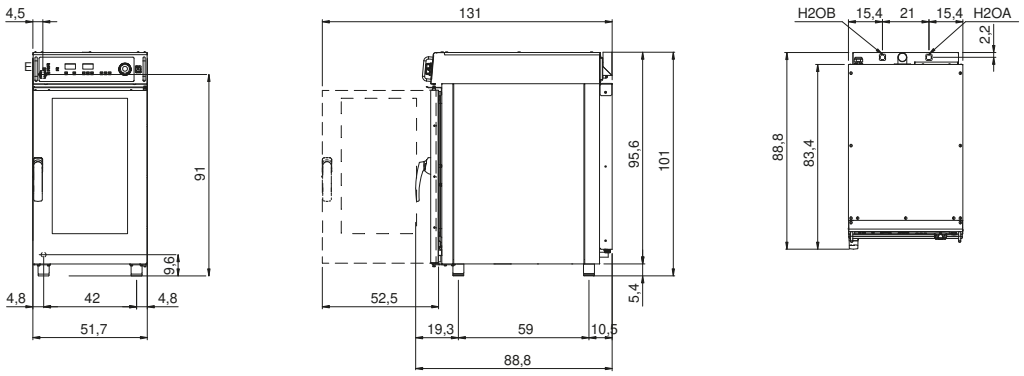

E: Electric connection

D: Drain for water

H2OA: Water inlet

H2OB : Softened water inlet

In order to constantly offer the best possible products we reserve the right to make changes on technical specifications without incurring any obligation for equipment previosly or subsequently sold.